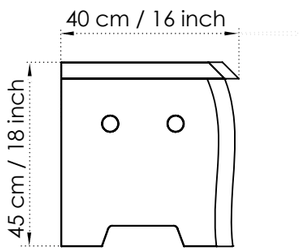
40 cm / 16 inch
45 cm / 18 inch

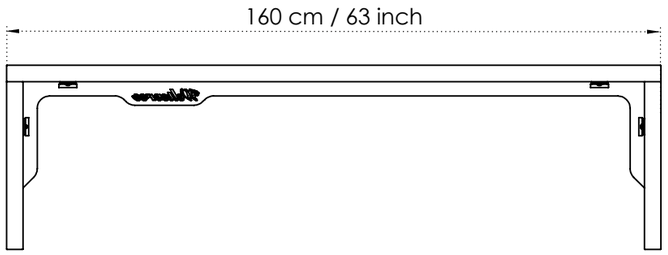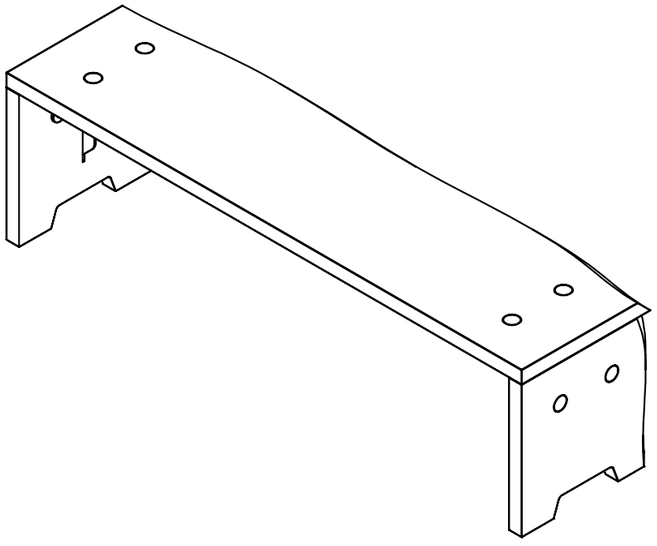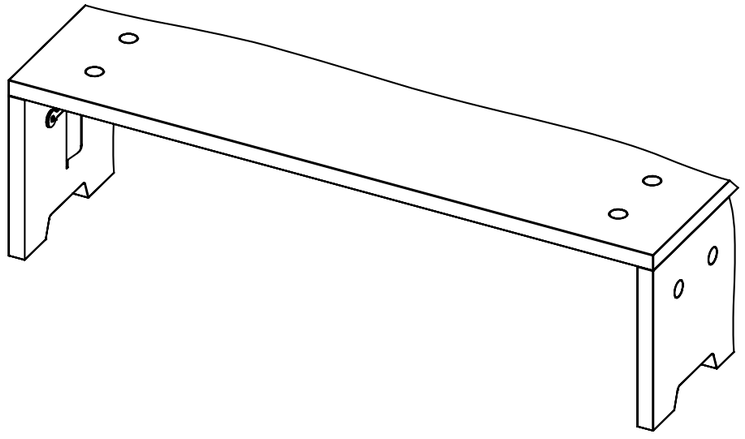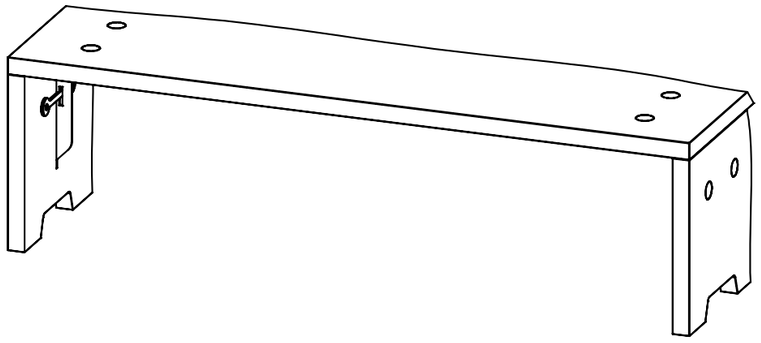
160 cm / 63 inch